VOLVO PENTA GENSET ENGINE

TAD1641GE

484 kW (658 hp) at 1500 rpm, 565 kW (768 hp) at 1800 rpm, acc. to ISO 3046

The TAD1641GE is a powerful, reliable and economical Generating Set Diesel Engine built on the dependable in-line six design.

Durability & low noise

Designed for easiest, fastest and most economical installation. Well-balanced to produce smooth and vibration-free operation with low noise level.

To maintain a controlled working temperature in cylinders and combustion chambers, the engine is equipped with piston cooling. The engine is also fitted with replaceable cylinder liners and valve seats/guides to ensure maximum durability and service life of the engine.

Low exhaust emission

The state of the art, high-tech injection and charging system with low internal losses contributes to excellent combustion and low fuel consumption.

The TAD1641GE complies with EU Stage 2 exhaust emission regulations.

Easy service & maintenance

Easily accessible service and maintenance points contribute to the ease of service of the engine.

Technical description

Engine and block

- Optimized cast iron cylinder block with optimum distribution of forces without the block being unnecessary heavy.
- Wet, replaceable cylinder liners
- Piston cooling for low thermal load on pistons and reduced ring temperature
- Tapered connecting rods to reduce risk of piston cracking
- Crankshaft induction hardened bearing surfaces and fillets with seven main bearings for moderate load on main and big-end bearings
- Nitrocarburized transmission gears for heavy duty operation
- Keystone top compression rings for long service life
- Viscous type crankshaft vibration damper
- Replaceable valve guides and valve seats
- Over head camshaft and four valves per cylinder equipped with camshaft damper to reduce noise and vibrations.

Lubrication system

- Full flow oil cooler
- Full flow disposable spin-on oil filters, for extra high filtration
- The lubricating oil level can be measured during operation (Standard dipstick only)
- Gear type lubricating oil pump, gear driven by the transmission

BBCO

KASHANI POWER GENERATION

دیزل ژنراتور کاشانی (شرکت بهساز)

تدارک و توزیع دیزل ژنراتور KVA (2000-2) همراه با نصب و خدمات پس از فروش ، طراحی و ساخت انواع تابلوهای نرمال ، اتوماتیک ، پارالینگ

آدرس : تهران ، خیابان سعدی جنوبی ، نبش کوچه بوشهری ، ساختمان سلامت ، پلاک ۲۲

۳۳۹۲۶۸۳۴ - ۳۳۹۴۷۵۹۵

۰۹۱۰۱۷۸۱۳۲۷

۰۹۱۰۱۷۸۱۳۲۷

kashanico@yahoo.com

behsazbahrevar@gmail.com

WWW.Kashanico.com

Fuel system

- Self de-aerating system. When replacing filters all fuel stays in the engine.
- Non-return fuel valve
- Electronic unit injectors
- Fuel prefilter with water separator and water-in-fuel indicator / alarm
- Gear driven low-pressure fuel pump
- Fine fuel filter with manual feed pump and fuel pressure switch
- Fuel shut-off valve, electrically operated

Cooling system

- Efficient cooling with accurate coolant control through a water distribution duct in the cylinder block. Reliable sleeve thermostat with minimum pressure drop
- Belt driven, maintenance-free coolant pump with high degree of efficiency

Turbo charger

- Efficient and reliable turbo charger
- Extra oil filter for the turbo charger

Electrical system

- Engine Management System 2 (EMS 2), an electronically controlled processing system which optimizes engine performance. It also includes advanced facilities for diagnostics and fault tracing
- The instruments and controls connect to the engine via the CAN SAE J1939 interface, either through the Control Interface Unit (CIU) or the Digital Control Unit (DCU). The CIU converts the digital CAN bus signal to an anolog signal, making it possible to connect a variety of instruments. The DCU is a control panel with display, engine control, monitoring, alarm, parameter setting and diagnostic functions. The DCU also presents error codes in clear text.
- Sensors for oil pressure, oil temp, boost pressure, boost temp, coolant temp, fuel temp, water in fuel, fuel pressure and two speed sensors. Crank case pressure, piston cooling pressure, oil level and air filter pressure drop sensors.
- Alternator 24V / 80A

BBCO

VOLVO PENTA

TAD1641GE

Technical Data

General

Engine designation	TAD1641GE
No. of cylinders and configuration	in-line 6
Method of operation	4-stroke
Bore, mm (in.)	144 (5.67)
Stroke, mm (in.)	165 (6.50)
Displacement, l (in³)	16.12 (983.7)
Compression ratio	16.5:1
Dry weight, kg (lb)	1480 (3263)
Dry weight with Gen Pac, kg (lb)	1910 (4211)
Wet weight, kg (lb)	1550 (3417)
Wet weight with Gen Pac, kg (lb)	2020 (4453)

Performance	**1500 rpm**	**1800 rpm**
with fan, kW (hp) at:		
Prime Power	430 (585)	485 (660)
Max Standby Power	473 (643)	546 (743)

Lubrication system	**1500 rpm**	**1800 rpm**
Oil consumption, liter/h (US gal/h) at:		
Prime Power	0.10 (0.026)	0.11 (0.029)
Max Standby Power	0.10 (0.026)	0.12 (0.032)
Oil system capacity incl filters, liter	42	

Fuel system	**1500 rpm**	**1800 rpm**
Specific fuel consumption at:		
Prime Power, g/kWh (lb/hph)		
25 %	216 (0.350)	228 (0.369)
50 %	199 (0.322)	204 (0.331)
75 %	196 (0.318)	202 (0.328)
100 %	199 (0.322)	206 (0.334)
Max Standby Power, g/kWh (lb/hph)		
25 %	217 (0.351)	233 (0.370)
50 %	197 (0.320)	205 (0.332)
75 %	196 (0.318)	203 (0.330)
100 %	200 (0.324)	210 (0.340)

Intake and exhaust system	**1500 rpm**	**1800 rpm**
Air consumption, m³/min (cfm) at:		
Prime Power	35.5 (1254)	44.0 (1554)
Max Standby Power	38.0 (1342)	45.8 (1617)
Max allowable air intake restriction, kPa (In wc)	5 (20.1)	5 (20.1)
Heat rejection to exhaust, kW (BTU/min) at:		
Prime Power	326 (18539)	373 (21212)
Max Standby Power	356 (20245)	442 (25136)
Exhaust gas temperature after turbine, °C (°F) at:		
Prime Power	443 (829)	436 (817)
Max Standby Power	455 (851)	479 (893)
Max allowable back-pressure in exhaust line, kPa (In wc)	10 (40.2)	10 (40.2)
Exhaust gas flow, m³/min (cfm) at:		
Prime power	85.0 (3002)	100.6 (3553)
Max Standby Power	92.0 (3249)	110.4 (3899)

Cooling system	**1500 rpm**	**1800 rpm**
Heat rejection radiation from engine, kW (BTU/min) at:		
Prime Power	18 (1024)	22 (1251)
Max Standby Power	20 (1137)	24 (1365)
Heat rejection to coolant kW (BTU/min) at:		
Prime Power	170 (9668)	212 (12056)
Max Standby Power	184 (10464)	231 (13137)
Fan power consumption, kW (hp)	11 (15)	19 (26)

Standard equipment

	Engine	Gen Pac
Engine		
Automatic belt tensioner	•	•
Lift eyelets	•	•
Flywheel		
Flywheel housing with conn. acc. to SAE 1	•	•
Flywheel for 14" flex. plate and flexible coupling	•	•
Vibration dampers	•	•
Engine suspension		
Fixed front suspension	•	•
Lubrication system		
Oil dipstick	•	•
Full-flow oil filter of spin-on type	•	•
By-pass oil filter of spin-on type	•	•
Oil cooler, side mounted	•	•
Low noise oil sump	•	•
Fuel system		
Fuel filters of disposable type	•	•
Electronic unit injectors	•	•
Pre-filter with water separator	•	•
Intake and exhaust system		
Air filter with replaceable paper insert	•	•
Air restriction indicator	•	•
Air cooled exhaust manifold	•	•
Connecting flange for exhaust pipe	•	•
Exhaust flange with v-clamp	•	•
Turbo charger, low right side	•	•
Cooling system		
Radiator incl intercooler	•[1)]	•
Belt driven coolant pump	•	•
Fan hub	•	•
Thrust fan	•[1)]	•
Fan guard	–	•
Belt guard	–	•
Control system		
Engine Management System (EMS) with CAN-bus interface SAE J1939	•	•
CIU, Control Interface Unit	–	–
Alternator		
Alternator 80A / 24V	•	•
Starting system		
Starter motor, 7.0kW, 24V	•	•
Connection facility for extra starter motor	•	•
Instruments and senders		
Temp.- and oil pressure for automatic stop/alarm 103°C	•	•
Other equipment		
Expandable base frame	–	•
Engine Packing		
Plastic wrapping	•	•

[1)] must be ordered, se order specification
– optional equipment or not applicable
• included in standard specification

Dimensions TAD1641GE

Not for installation

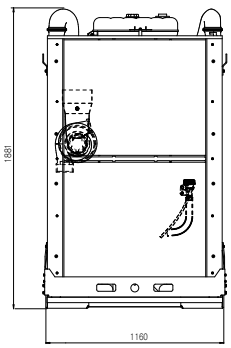

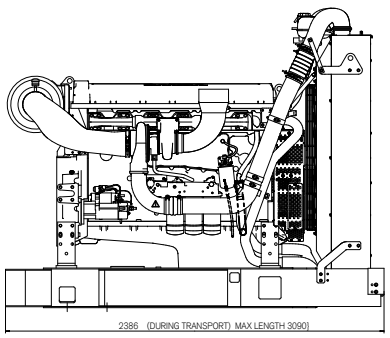

Note! Not all models, standard equipment and accessories are available in all countries.
All specifications are subject to change without notice.
The engine illustrated may not be entirely identical to production standard engines.

Power Standards
The engine performance corresponds to ISO 3046, BS 5514 and DIN 6271. The technical data applies to an engine without cooling fan and operating on a fuel with calorific value of 42.7 MJ /kg (18360 BTU/lb) and a density of 0.84 kg/liter (7.01 lb/US gal), also where this involves a deviation from the standards. Power output guaranteed within 0 to +2% att rated ambient conditions at delivery. Ratings are based on ISO 8528. Engine speed governing in accordance with ISO 3046/IV, class A1 and ISO 8528-5 class G3

Exhaust emissions
The engine complies with EU stage 2 emission legislation according to the Non Road Directive EU 97/68/EEC. The engine also complies with TA-luft -50% exhaust emission regulations.

Rating Guidelines
PRIME POWER rating corresponds to ISO Standard Power for continuous operation. It is applicable for supplying electrical power at variable load for an unlimited number of hours instead of commercially purchased power. A10 % overload capability for govering purpose is available for this rating.
MAXIMUM STANDBY POWER rating corresponds to ISO Standard Fuel Stop Power. It is applicable for supplying standby electrical power at variable load in areas with well established electrical networks in the event of normal utility power failure. No overload capability is available for this rating.
1 hp = 1 kW x 1.36

Information
For more technical data and information, please look in the Generating Set Engines Sales Guide.

BBCO

VOLVO PENTA

AB Volvo Penta
SE-405 08 Göteborg, Sweden
www.volvopenta.com

English 06-2014. © 2014 AB Volvo Penta